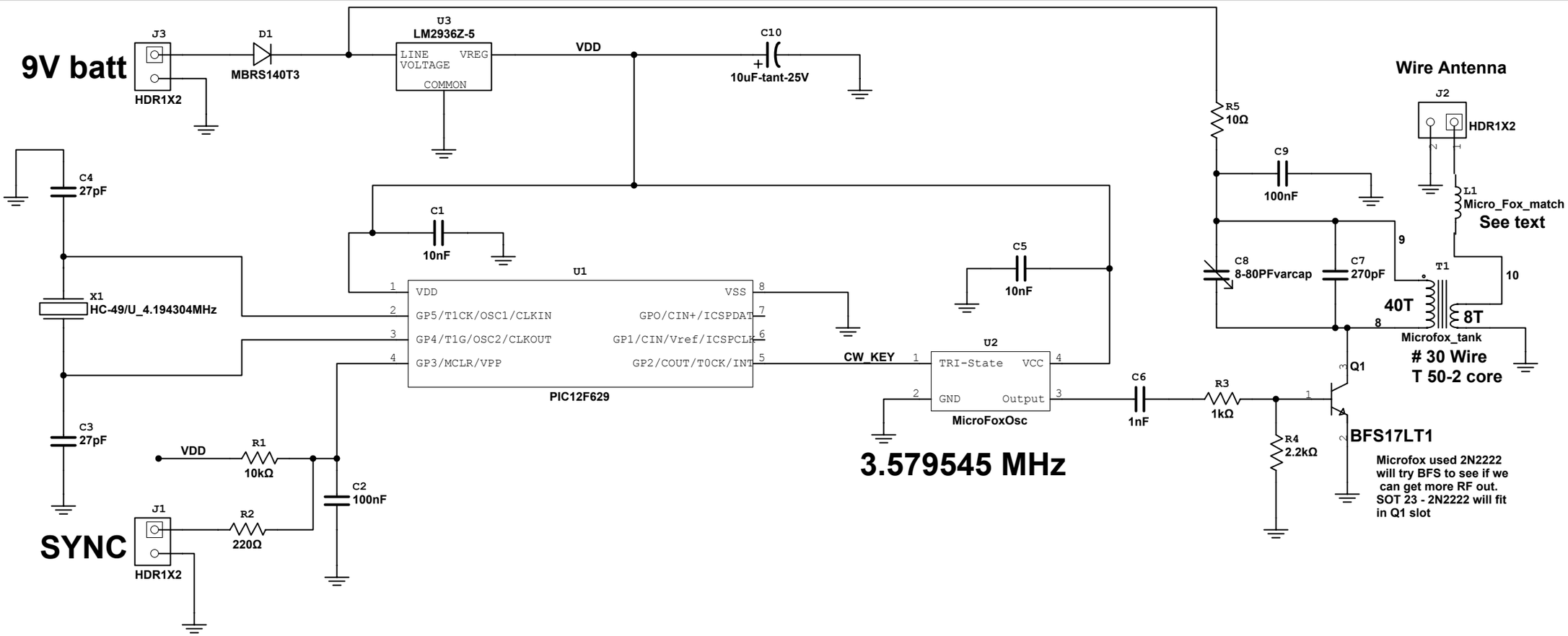

Note: First Microfox was built in 2004

Jerry Boyd WB8WFK
9128 Surrey NE
Albuquerque NM
(505) 821-4780

80 meter ARDF MicroFox

Title: 80M-Microfox	Desc.: 80M-Microfox	
Designed by:	Document No: 0001	Revision: 1.0
Checked by:	Date: 2009-01-02	Size: LE
Approved by:	Sheet 1 of 1	