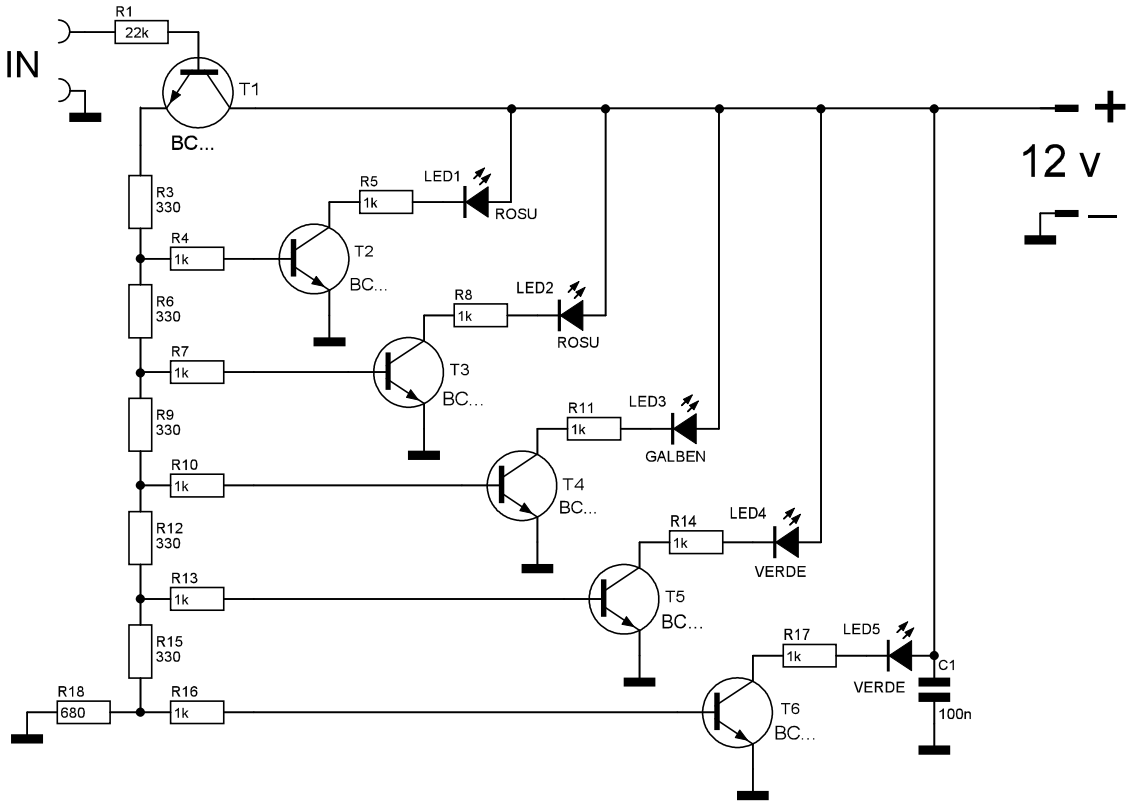

Modifications			Date	Name	Description	Page no.
Date	Name				INDICATOR NIVEL	
						Pages
		by YO5AT			Schematic no. V1.0	