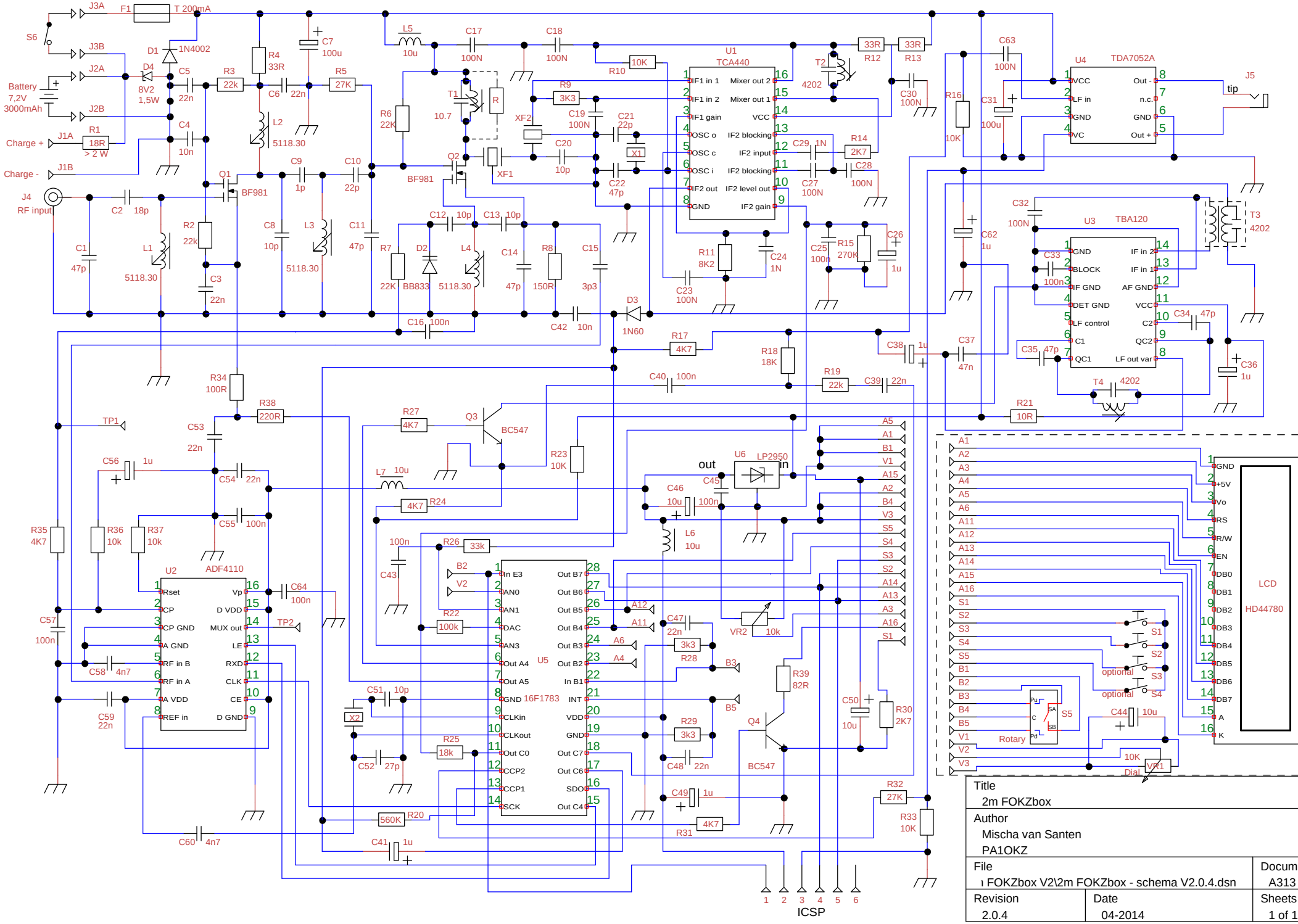


Title
2m FOKZbox

Author
Mischa van Santen
PA1OKZ

File
FOKZbox V2\2m FOKZbox - schema V2.0.4.dsn

Revision
2.0.4

Date
04-2014

Docum
A313
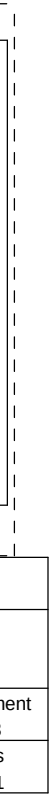
Sheets
1 of 1